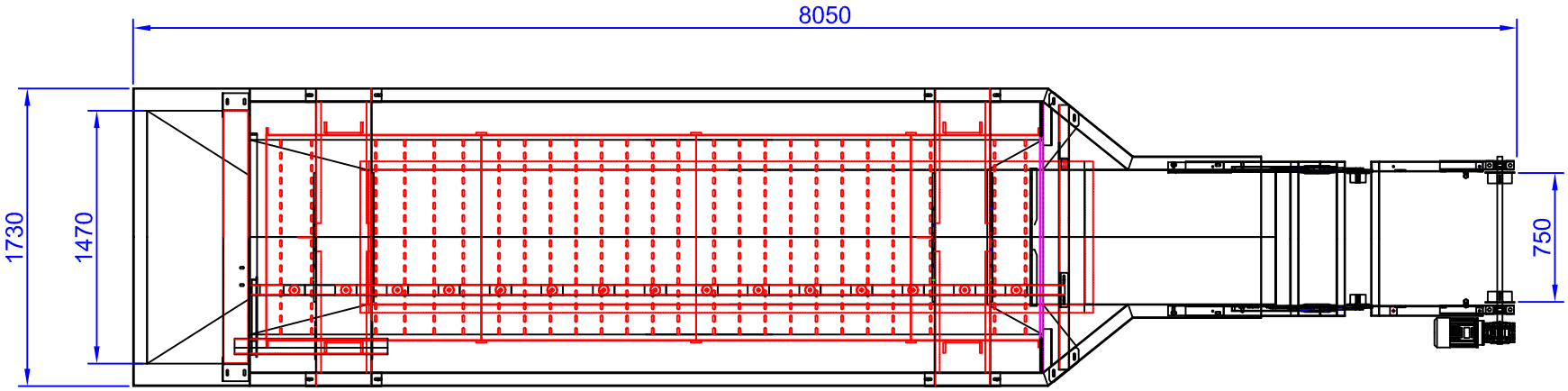

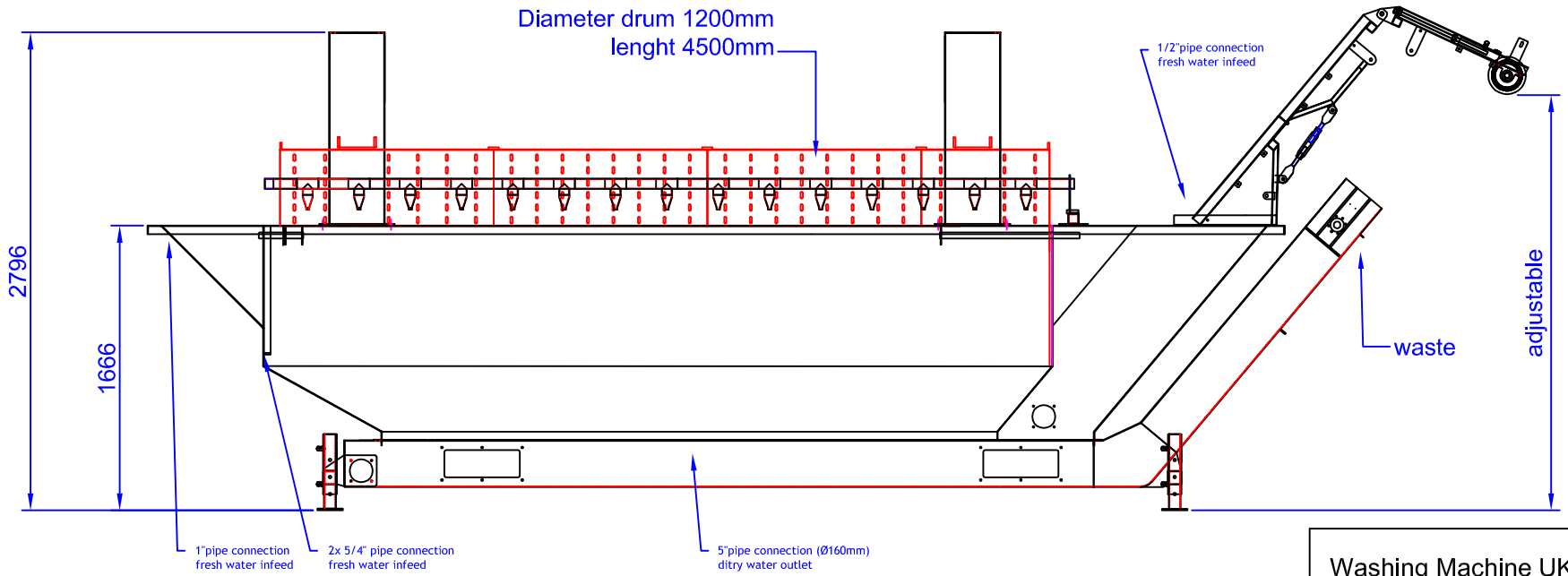

Washing Machine UK-450

Allround
Vegetable processing
www.allroundvp.nl

G:\Website\Tekeningen Web Site\Machines\5. Washing Machines\UK 450\UK-450.dwg, 30-3-2012 13:19:21, CutePDF Writer